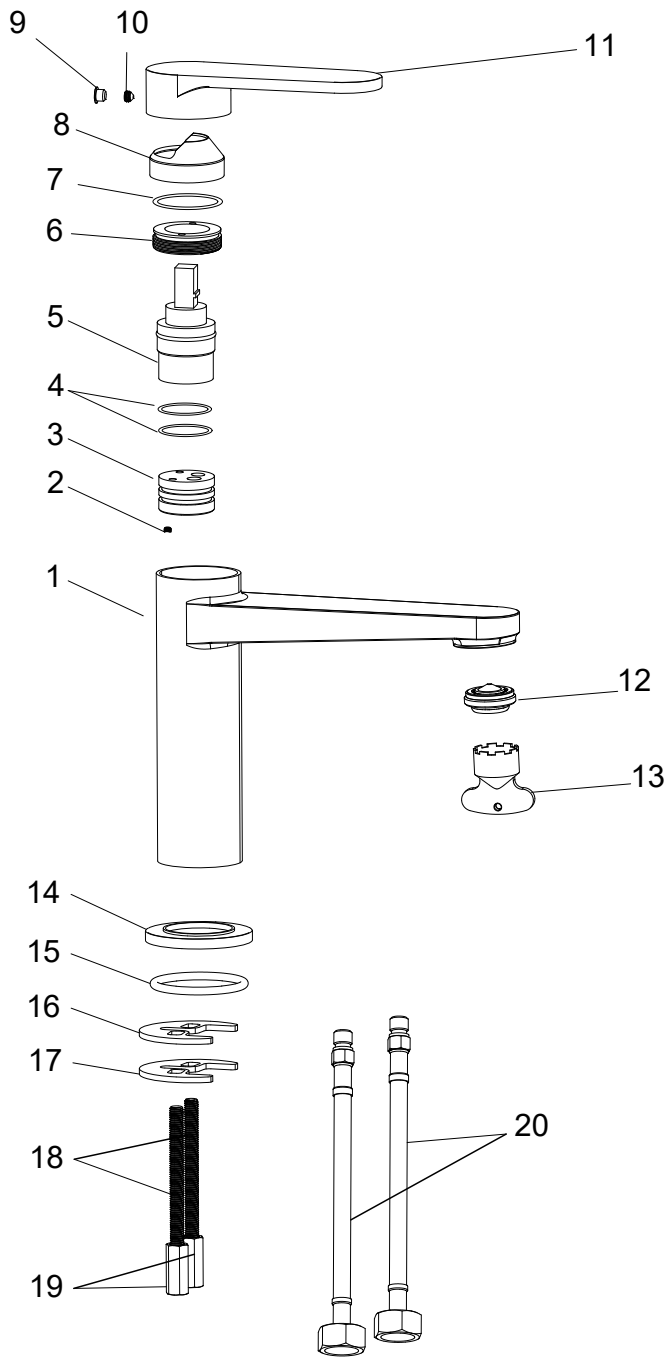

NO:	PART	MATERIAL	QTY	MANUFACTURES	Model Number	If Contact with wator	WRAS Approval Numher	Manufacturing Process
20	Flexible hose	S.S304	2					
19	Nut	Brass	2					
18	Mounting screw	S.S304	2					
17	Mounting plate	S.S304	1					
16	Mounting washer	Rubber	1					
15	O-ring	NBR	1					
14	Base	Brass	1					
13	Aerator key		1					
12	Aerator		1					
11	Handle body	Zinc	1					
10	Screw	S.S 304	1					
9	Plug	ABS	1					
8	Cover	Brass	1					
7	O-ring	EPDM	1					
6	Cartridge nut	Brass	1					
5	Cartridge		1					
4	O-ring	NBR	2					
3	Cartridge seat	Brass	1					
2	Screw	S.S304	1					
1	Valve body	Brass	1					

PRODUCT;New basin mixer whit flat handle
MODEL;FK-0421-CP
DRG;06/2023