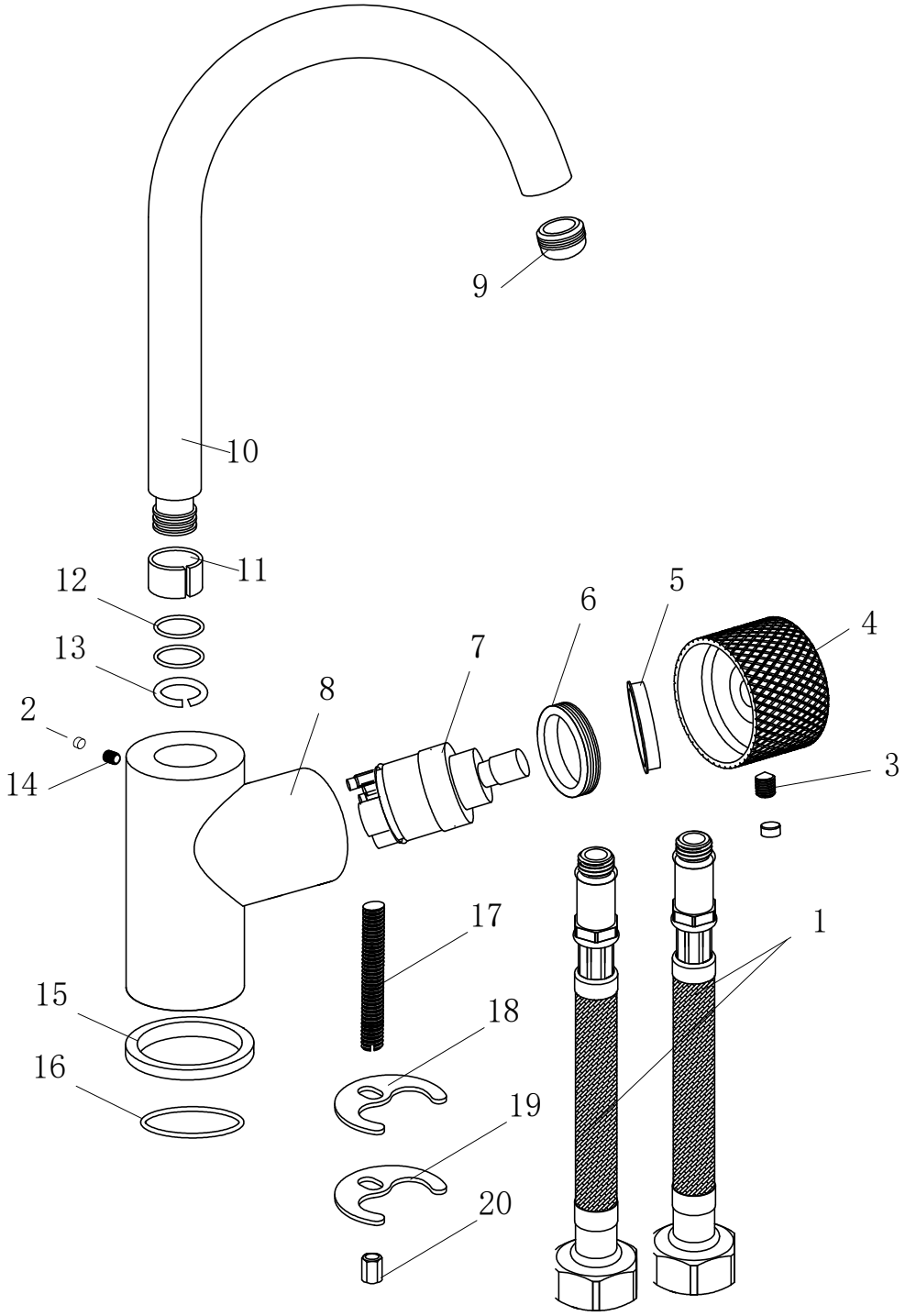

NO		PART	PRODUCT MODEL	MATERIAL		QTY
20		Nut		Brass		1
19		Base plate		SS.304		1
18		Washer		EPDM		1
17		Screw	M8X80	SS.304		1
16		O-ring	φ46X3			1
15		Base		Brass		1
14		Screw	M4X6	SS.304		1
13		Inserting	φ18X3X3	ABS		1
12		O-ring	φ20X2.8			2
11		Inserting		POM		1
10		Spout		Brass		1
9		Aerator	43.2202.450)			1
8		Body		Brass		1
7		Cartridge	CITEC CT35GH001			1
6		Cartridge nut		Brass		1
5		Cover		ABS		1
4		Knurled handle		Zinc		1
3		Screw	M5X4	SS.304		1
2		Plug	φ5.4X4.5	EPDM		2
1		Flexible hose(KIWA)	Tucai DN6			2

MODEL:

10060913
FK-0329K

DRG; 10 /2022