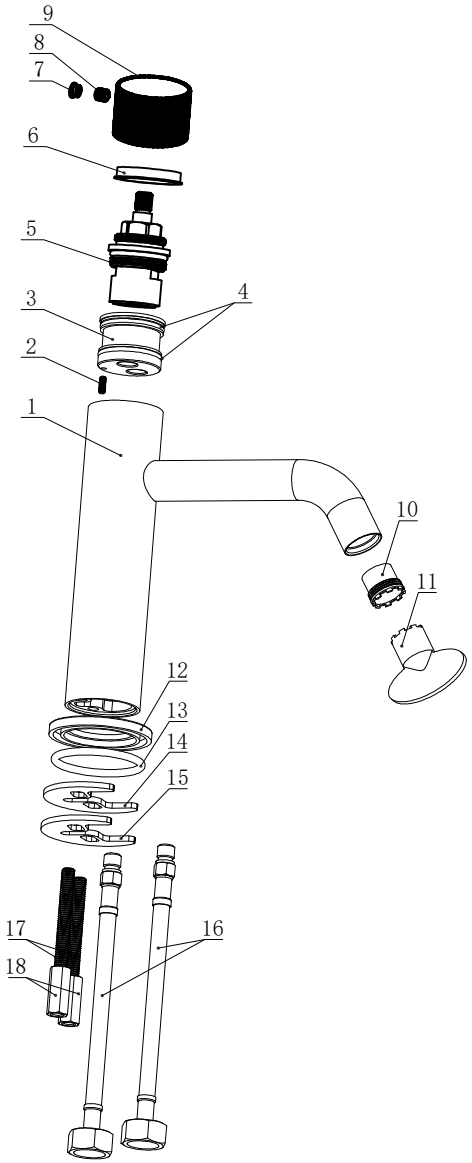

NO.	PART	PRODUCT MODEL	MARTRIAL		QT
18	Nut		BRASS		2
17	Screw	M6X70	SS.304		2
16	Flexible hose(KIWA)	Tucai DN6			2
15	Base plate		SS.304		1
14	Washer		RUBBER		1
13	O-ring	φ 44X3.5	NBR		1
12	Base		BRASS		1
11	Aerator	44. 3234. 010	ABS		1
10	Aerator spanner	09. 9150. 000)	ABS		1
9	Knurled handle		BRASS		1
8	Screw	M5X4	SS.304		1
7	Plug	φ 5. 4X4. 5	EPDM		1
6	Guide sleeve		ABS		1
5	Cartridge	Sedal SN-25-SD			1
4	O-ring	φ 30X2	NBR		2
3	Cartridge seat		BRASS		1
2	Screw	M8X8	SS.305		1
1	Body		BRASS		1

MODEL

FK-0321K

DRG; 10 /2022

Y