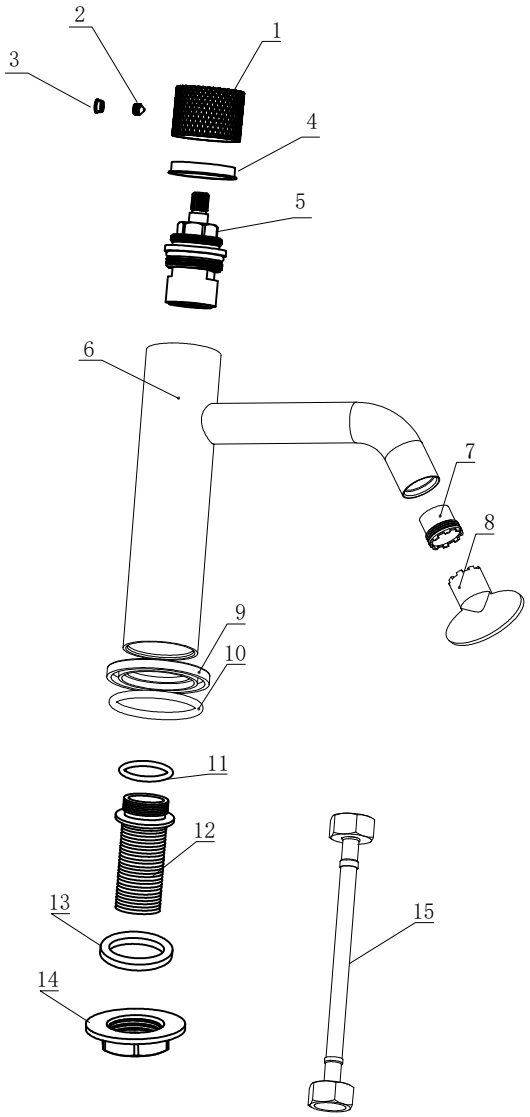

NO.	PART	PRODUCT MODEL		MATERIAL	QTY
15	Flexible hose(KIWA)	Tucai DN8			1
14	1/2 FLANGE NUT			POM	1
13	Washer	φ40X21X3		NBR	1
12	Connection pipe			BRASS	1
11	O-ring	φ22X2		NBR	1
10	0-ring	φ45X4		NBR	1
9	Base			BRASS	1
8	Aerator spanner	Neoper 09.9150.000)		ABS	1
7	Aerator	44. 3234. 010		ABS	1
6	Body			BRASS	1
5	Cartridge				1
4	Guide sleeve			ABS	1
3	Plug			EPDM	1
2	Screw	M5X5		SS.304	1
1	Handle			BRASS	1

MODEL

FK-0320K-CP

DRG; 10 /2022