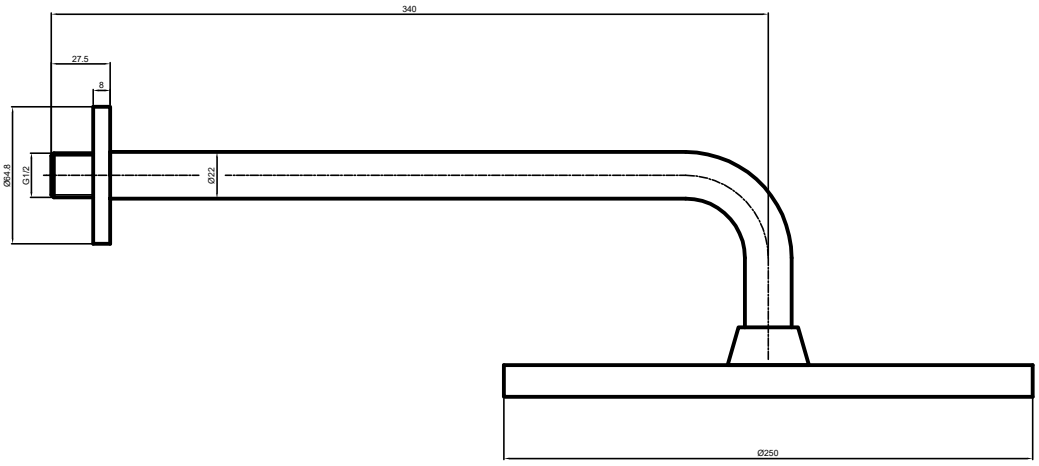

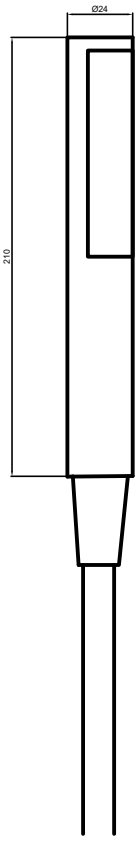

FK-003K

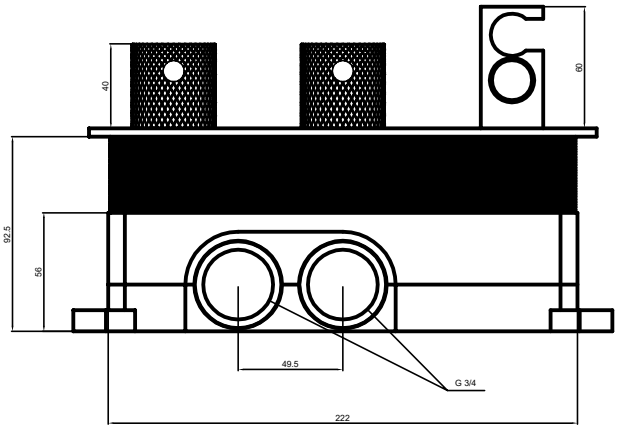

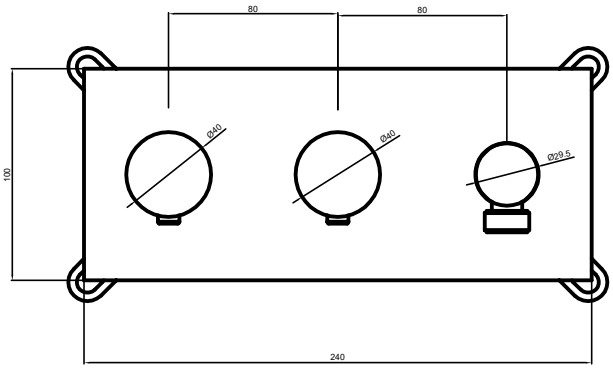

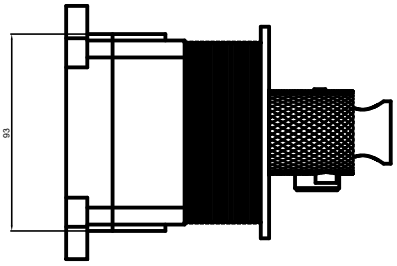

All dimensions are in mm.